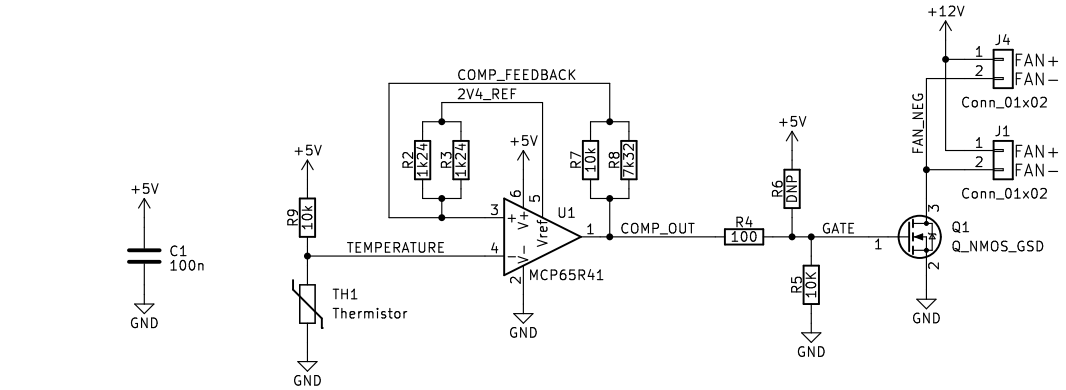

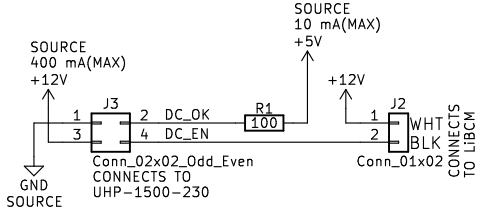

Linsight

Sheet: /

File: FoMoCoFastCharger.kicad_sch

Title: LiBCM UHP−1500 FAN CONTROL

Size: A5	Date: 2024−01−31	**Rev: A**
KiCad E.D.A. kicad 7.0.10		Id: 1/1